Finding Your Crowd

This section is designed to help guide a program creator through the process of finding vessels that are both equipped for and interested in participating in CSB. The pages below outline not only what to look for in vessels and operators, but also how program managers can best optimize their program to maintain engagement and enthusiasm amongst participants (see examples of stakeholder engagement under Templates).

- Vessel features
- Motivating vessels and overcoming hesitation
- Maintaining vessel engagement
- Recruitment and onboarding

Vessel features

The suitability of a vessel for CSB depends on both its onboard hardware and the engagement of its owner or operator. A wide range of equipment brands can be used, which is important because it allows nearly any vessel to participate.

As mentioned briefly in previous sections, CSB requires vessels to be equipped with navigational equipment including a depth transducer and a GNSS unit. GNSS instruments are typically paired with a chart plotter that includes an internal timekeeping system. It is essential that the vessel's time settings are enabled and properly calibrated to ensure data are accurate.

Next, a depth transducer is required. Depth transducers, regardless of brand, are generally compatible with CSB. Transducers take measurements in a standardized digital unit that can be converted to meters, feet, or other display units, so the user's preferred display setting does not affect data collection or utility.

Each of the above tools need to be connected to one another via a backbone of some sort. Typically, this is either a NMEA2000 or a NMEA0183 backbone (pictured below), across which instruments will send messages. Each logger is built to accommodate one or both backbone types, and some models (like the WIBL) have both connectors. Adaptors that convert from NMEA0183 to NMEA2000 are available, if needed. If a vessel does not already have an NMEA2000 backbone, one may be installed at the project's discretion. NMEA2000 installation generally takes 30–60 minutes.

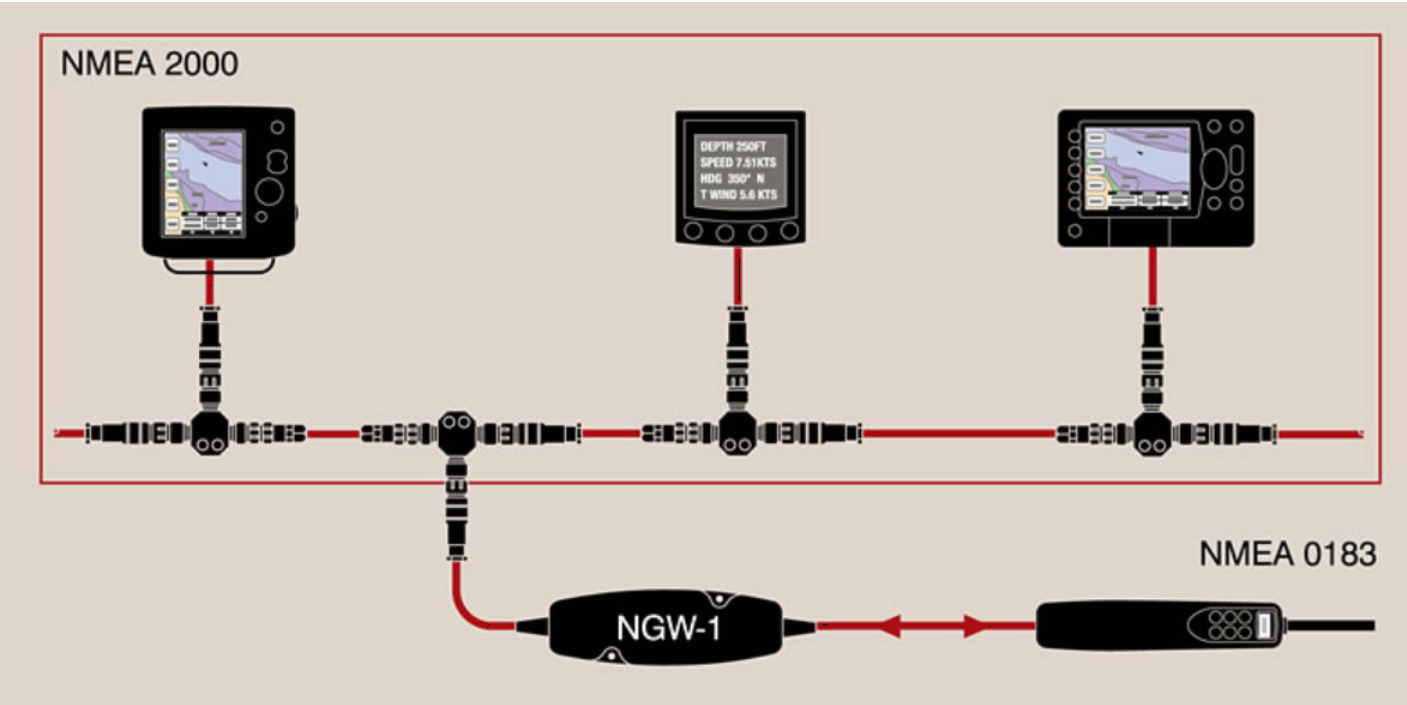

Loggers may also be built into a system using a digital plugin for a chart plotter or a multi-function display system. Some great examples of companies that are working to contribute data from this

form of logger to the overarching Seabed2030 project include Raymarine, Rosepoint, and WASSP. To date, these companies have generally opted to become their own trusted nodes in order to handle this data; however, WASSP has established a partnership with the International SeaKeepers Society in which they contribute data through the SeaKeepers trusted node.

The final piece of this puzzle is finding a willing and engaged vessel owner. The following sections will outline some of the important considerations for a vessel to become involved in CSB, and how to find and keep participants that contribute good data.

Motivating vessels and overcoming hesitation

Depending on a vessel's ownership, motivations to participate in CSB may be vastly different. Based on the authors' collective experiences, this section outlines the common motivations observed among several types of participants. While not exhaustive, these examples are intended to illustrate patterns that may help guide outreach to similar audiences.

There are several common motivations that seem to apply across many crowds and spaces. For example, lower-cost solutions and solutions that offer increased ease-of-function appeal to many crowds. Vessels may be more willing to contribute if participation in CSB costs them less financially and/or if their participation requires relatively little contribution of time or knowledge. Currently, CSB is being widely promoted by the Nippon Foundation-GEBCO Seabed2030 Project and by organizations like the International SeaKeepers Society, which can both provide YDVR loggers to participants free of charge. Alternatively, companies such as Orange Force Marine offer higher-tech options where CSB data are remotely retrieved from loggers, motion-corrected, and automatically relayed to global initiatives on behalf of and with the user's consent. The hands-off nature of these loggers makes them an attractive solution to many vessels. In addition to this, many vessels are motivated by being able to visualize their data online (i.e., a data portal map), receiving their data in a usable format after the data have been processed (i.e., tidal corrections), and by understanding the outcomes that can or have been achieved because of their participation. Meaningful case studies, both globally and locally, often act as drivers to participate.

The concerns and challenges of different crowds will vary as much as their motivations will. One classic example of a crowd is the yachting community. This community is often motivated by seeing impactful use-cases, but can have a unique need for privacy. Within this community, it is common to get requests either for data anonymity or for delayed transmission to the IHO DCDB so that near-real-time vessel tracking is not occurring. Another great example of a crowd is a fishing community. Fishers may not want their fishing spots to be made public knowledge, so providing an option for anonymous data submission could help assuage concerns about revealing fishing locations to competitors.

Working to accommodate the unique needs of your own crowd is an important step in overcoming hesitation within that community. Hosting a stakeholder meeting is a great way to gather information about what motivates and what causes concerns within your crowd. For examples of stakeholder meeting agendas, see the Templates section.

Maintaining vessel engagement

Tools to maintain vessel engagement may include communication and contact, personalization of mission goals, and celebrating the impact of a vessel's participation. These forms of engagement do require input and effort on behalf of the CSB program managers and range widely in time-intensiveness. Depending on an organization's available man-hours, some of the following examples may be more feasible to implement than others.

For example, the Great Lakes Observing System (GLOS), in collaboration with Orange Force Marine, has created a data visualization product that uses a hexagonal grid to highlight areas with high and low data density. This system required up-front programming labor, but now runs automatedly, making it a relatively low-maintenance way of maintaining vessel engagement. This example "gamifies" CSB efforts by encouraging participants to get involved so that they can be the one to contribute data where it's never been collected before. 'Gamification' could be taken a step further by providing a dashboard or application where top contributors are rewarded. It would also be necessary to note a country's status on having signed the global circular letter when in national waters.

To better serve the Florida Tampa Bay region, the Center for Ocean Mapping and Innovative Technologies (COMIT) developed a dedicated ArcGIS® Esri Hub called "Crowd the Bay.". This site was designed to host regional CSB data in a way that directly engages local stakeholders. CSB data are pulled quarterly from the DCDB and run through NOAA's Pydro Explorer application to generate CSB datasets that are corrected for tidal fluctuations. Once corrected, the data are imported into ArcGIS® Pro to create user-friendly shapefiles that are then shared as Esri Web Layers within the "Crowd the Bay" Hub data portal. The ArcGIS® Pro workspace also allows the data to be reformatted and shared according to participant needs (i.e., shapefiles, KMLs, xyz, etc.). Sustained stakeholder engagement depends on ensuring that contributors benefit from the use of CSB data.

In a similar vein, although through a more manual process, the International SeaKeepers Society has developed a "Million Soundings Society" to celebrate any of their vessels that have individually contributed over 1 million depth soundings to Seabed2030. This is celebrated at their annual gala where members will be "inducted" and celebrated for their contribution. Data contributions are tracked through the DCDB CSB Data Provider Dashboard. Another publicly available dashboard includes the FARSOUNDER Dashboard, which is likely to include leaderboard functionality in the near future, and currently includes automatically generated graphics of each vessel or trusted node's contributions to date. If a vessel is particularly interested in seeing their own data, as is common with the COMIT program stakeholders, you can provide this to vessels directly or provide them guidance on how to retrieve their data on their own. A guide on how to do this can be found in the Data Extraction and Processing section. An additional tutorial for participants to visualize their own data using a free and open-source software (QGIS) can be found in the Data Visualization section. The DCDB is also rolling out customized provider and vessel map URLs in 2026, allowing

providers and any user to quickly bookmark and share links to their specific data contributions.

Finally, engagement activities such as newsletters can help maintain consistent communication with stakeholders about the progress being made, updates in the program, new tools, and overall organization contributions. This will encourage vessels to stay involved and reach out with questions.

Recruitment and onboarding

When initiating engagement with a recruited vessel, it is important to include information about your program motivations and process. Some of these items may include (but are not limited to) the following:

- Your program's website
- Links to equipment checks such as the one linked here
- Link to the video produced by the Canadian Hydrographic Service (CHS) about what installing a logger means
- Information on use cases (see the Use Cases section for examples)
- Links to the DCDB, Seabed2030, or IHO sites to provide context on international goals and accomplishments

If possible, confirming vessel interest with a video or phone call, or in-person meeting can help to ensure everybody is on the same page about what it takes to be involved in this project. Once interest is confirmed you may want to send the following:

- An MOU or Letter of Agreement
- Metadata worksheet (one per vessel)
- Offsets worksheet (one per vessel)
- Request for address to ship logger OR a time and place to meet and install the logger

> Examples of each of these can be found in the Templates section